PRODUCT DATA

-L-a-v-a-L-I-N-E © ...

INVERTER CABINET

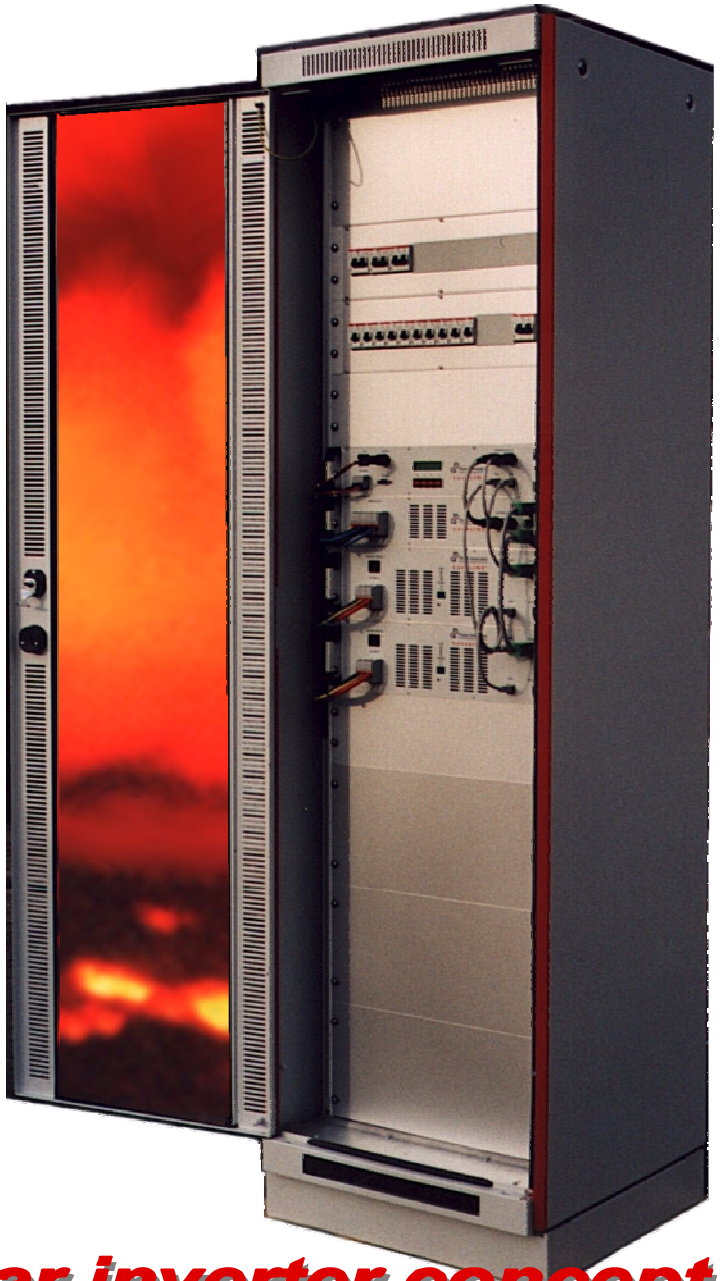

Controller

- Controlling up to 12 inverters
- Total and single output power detection
- Configurable manually or via terminal program
- System events storage
- Automatic alarm report via modem

Bypass

- Electronic bypass
- Versions 120A or 200A
- Overtemperature and fan failure detection
- Redundant to controller

Inverter

- Efficiency > 88%
- Low output impedance
- Robust IGBT-end-stage
- High crestfactor
- Overload- and short-circuit protected
- High-frequent switching

... a modular inverter concept

let's talk!

Power Innovation
Stromversorgungstechnik GmbH

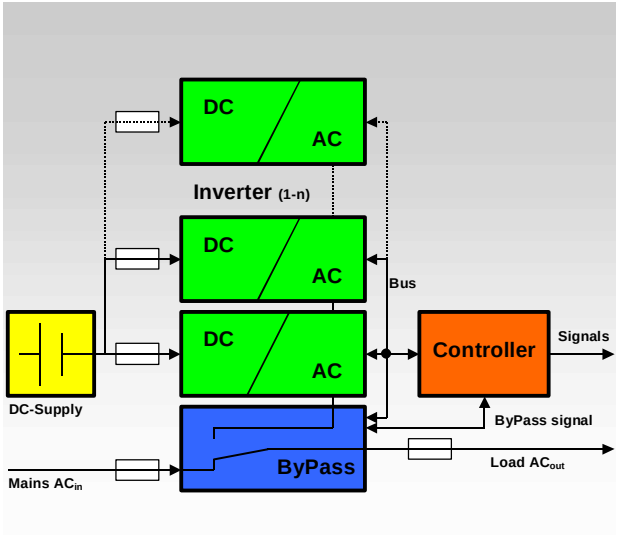

LavaLINE® System Overview

The system includes one controller and up to twelve inverters in parallel. The series inverters are available in 2kVA and 4kVA output power versions.

The controller is mandatory for systems operation. The controller is able to either manage a single inverter, or several inverters with even differing output power classes, due to an automatic recognition function by the controller.

An optional electronic bypass can be connected to the controller, the controller will automatically detect bypass error messages and assure the power supply of the connected load by switching over to mains (in OnLine mode) or inverter output (in OffLine mode).

The system is redundant. The bus communication among all devices and the AC output of each single device is built in a manner that assures exchange of a single inverter at any given time without having to shut down the entire system.

LavaLINE® Controller

Three RISC processors control the core of the system. They measure DC input voltage, mains and inverter voltage (momentary and effective) and mains frequency. DC input voltage, AC output voltage and output power of the entire system are displayed.

Several system limits are user configurable to assure optimal performance according to the environment the system is used in. The system configuration can be altered manually with four push-buttons and the display on the front panel. The user friendly menu interface makes alteration an easy-to-do task. The second option is to use an OS independend standard terminal program and change the system's limits via the RS-232 interface. The communication is text based, with short commands for the controller, which eases the integration of protocols into existing custom software.

Once limits have been set or defaults have been altered, they are saved to controller's nonvolatile memory, so that these custom specific values are available again on following startups of the system.

On system startup the controller checks the number and output power values of all attached inverters. These values are used to calculate the maximum total output power, or mains overload, of the entire system. In case redundancy is required, the calculated mains overload limit can be altered to the limit minus output of one inverter. It is also saved to nonvolatile memory.

In addition to these limits, inverter overload, undervoltage and overvoltage can be user configured for the output side of the system.

The DC supply limits are also variable, as defined below:

First Start (1): To startup the entire system, the "First Start" limit has to be reached and exceeded on the battery terminals.
UVP (2): The inverters are shut down when undervoltage protection level "UVP" is reached, in order to avoid deep discharge of the battery cells.

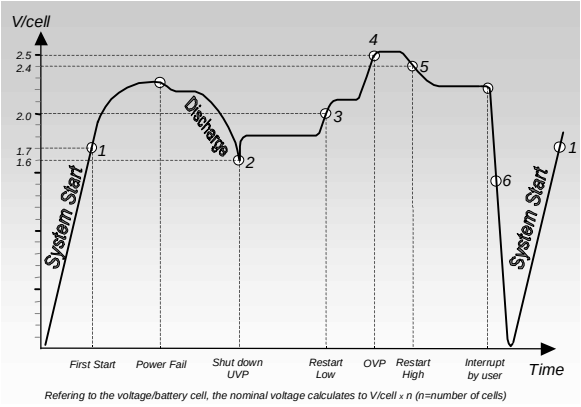

Diagram 1.1: Battery surveillance

Restart Low (3): After inverter shut down due to "UVP", the DC level has to come up to "Restart Low" level again. The inverters are enabled again.
OVP (4): At voltage level "OVP", all inverters are shut down (overvoltage protection).
Restart High (5): If inverters were shut down due to "OVP", decreasing the DC voltage to "Restart High" causes the inverters to be enabled again.
Reset (6): If the inverters are breaking off from battery (for example, the user switches off the battery switch) the terminal voltage drops below "Reset" limit, the limit for the system to operate again is reseted to "First Start" level.

In order to assure operation within all limits, the controller remains enabled at all times, exeeding these limits.

The controller can be connected to an optional bypass module (please see ByPass). With the bypass the system can be operated in either OnLine mode (load is supplied by inverters) or in OffLine mode (load is supplied by mains). The configuration is to be set in the controller module.

The bypass ist redundant to the controller. In case of a controller failure the bypass assures the power supply of the connected load.

Power Innovation Stromversorgungstechnik GmbH, Rehland 2, 28832 Achim, Germany
☎ +49 (0)4202 5117-0, 🖷 +49 (0)4202 5117-70, E-Mail: sales@powerinnovation.com, http://www.powerinnovation.com

Some additional configuration values can be altered when a bypass is connected:

Voltage limits: When a load is fed by a mains supply that has permanent distortions, the voltage limits can be changed to more suitable values, percentagewise, in order to avoid repeatingly switching. The limits for undervoltage can be altered to –10% and -15%, the overvoltage limits can be set to +10%, +15% and +20%.

It is recommended to alter the values only with relatively insensitive loads attached, electrical machines or heaters, respectively. For sensitive loads like computers or measuring equipment, running the system in On-Line mode would be the more suitable option, since the output voltage of the inverters is generated and stabilized by processors. This only applies when having a distorted mains sine, though.

By sending trigger pulses to the inverters, the bypass processor synchronizes mains and inverter voltage. In some cases this might take several seconds. Anyhow, if the bypass processor detects a failure condition, it switches over to the second voltage at any given time, even in asynchronous mode, to assure uninterupted load feed. As soon as the processor detects the original voltage to be within the limits again, it synchronizes both voltages before the load is switched back.

The controller has an additional signal connector located on the front panel, showing the state of the system (OnLine, OffLine, Power Good). The "normal-open" and "normal-closed" contacts are potential free.

The display on the front panel reads, besides the system state, two additional values. The first one is the total output power, the second one can be configured to any of the measured values.

The controller has a built-in, battery buffered real time system clock. All system events are saved together with date and time into non-volatile memory. System events are defined as alarms, system startup or shutdown or configuration alterations. The maximum number of events to be stored is 256. Since the memory works in FIFO scheme, after reaching the maximum, the memory pointer will be reset to the first location again and thus overwrite the first value, and so on.

All events and states can be checked and recalled at any given time, either on display or via RS-232 interface. Furthermore, the controller can be configured to report all events in real time, meaning immediately, to a predefined phone number via connected modem. Also, the controller is able to send event packets once per day, as opposed to real time. The time for the controller to automatically dial up the management unit can be configured, to be able to receive calls only at times of low network traffic.

The controller can be reset to factory defaults either via menu or terminal.

LavaLINE© ByPass

The bypass module is built as a semiconductor switch with active electronic control circuitry and two thyristor modules.

In case of a controller failure the bypass adopts the monitoring of the mains and assures the power supply of the connected load.

Additionally, it is equipped with an overtemperature and fan failure detection, which leads to an automatic shutdown of the system by reporting the failure to the controller module.

In order to be able to change a mains fuse easily in case of a failure, the bypass module has no built-in fuse.

This way the fuse can be located on a fuse strip. The external fusing has another advantage: the small housing of the bypass module in 2HE (50A) or 3HE (120A) and only 201mm depth.

LavaLINE© Inverter

The inverter modules are available in 2kVA and 4kVA output power versions, enabling to provide a maximum of up to 48kVA totally. They feature a high efficiency and a low impedance power stage.

This is achieved by the concept described below:

- The DC and AC filters act against disturbances from or to the outside.
- The softstart module controls power consumption on startup and prevents transient currents.
- The DC/DC converter generates a galvanic separated voltage of app. 370 VDC from the filtered input voltage.
- The DC intermediate circuit acts as a temporary power buffer and provides the values for power measurement and the active 100Hz ripple reduction.
- The IGBT full bridge converts the intermediate ciruit voltage to sinewave AC voltage. The IGBTs are provided with high frequent, pulse width modulated switching signals by the processor.
- The control circuit checks the static and dynamic behaviour of the inverter, i.e. load matching and offset adjustment.
- Only at synchronous phase position and same amplitude, the output relais enables the output.
- The LED bar on the front panel reads the output power of the inverter. Each LED corresponds to 25% nominal load.

Parallel connection of modules

All inverters are connected with one another by CAT5 cables. Each inverter has its own address to identify itself on the bus to the controller. The two digit seven segment indicator on the front panel reads the current address of the particular inverter module.

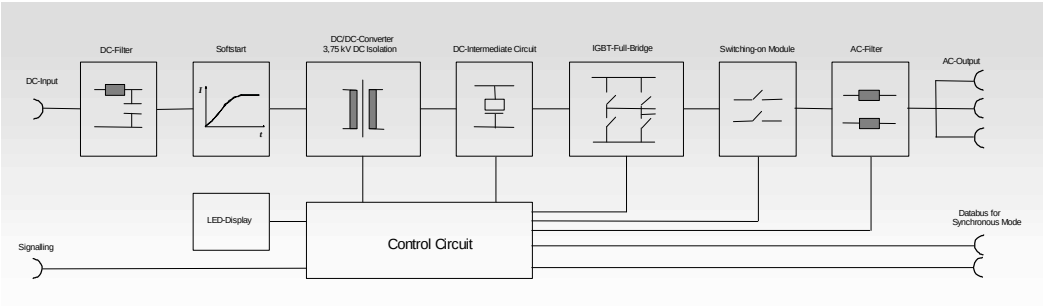

Diagram 1.2: Block diagram of the inverter

Power Innovation Stromversorgungstechnik GmbH, Rehland 2, 28832 Achim, Germany
☎ +49 (0)4202 5117-0, 🖷 +49 (0)4202 5117-70, E-Mail: sales@powerinnovation.com, http://www.powerinnovation.com